UNIT NO
BH084-101-73-19
T1608096W

UNIT DESCRIPTION

Oakland HEC with Mount

ASSEMBLED DIMENSIONS (W X D X H)
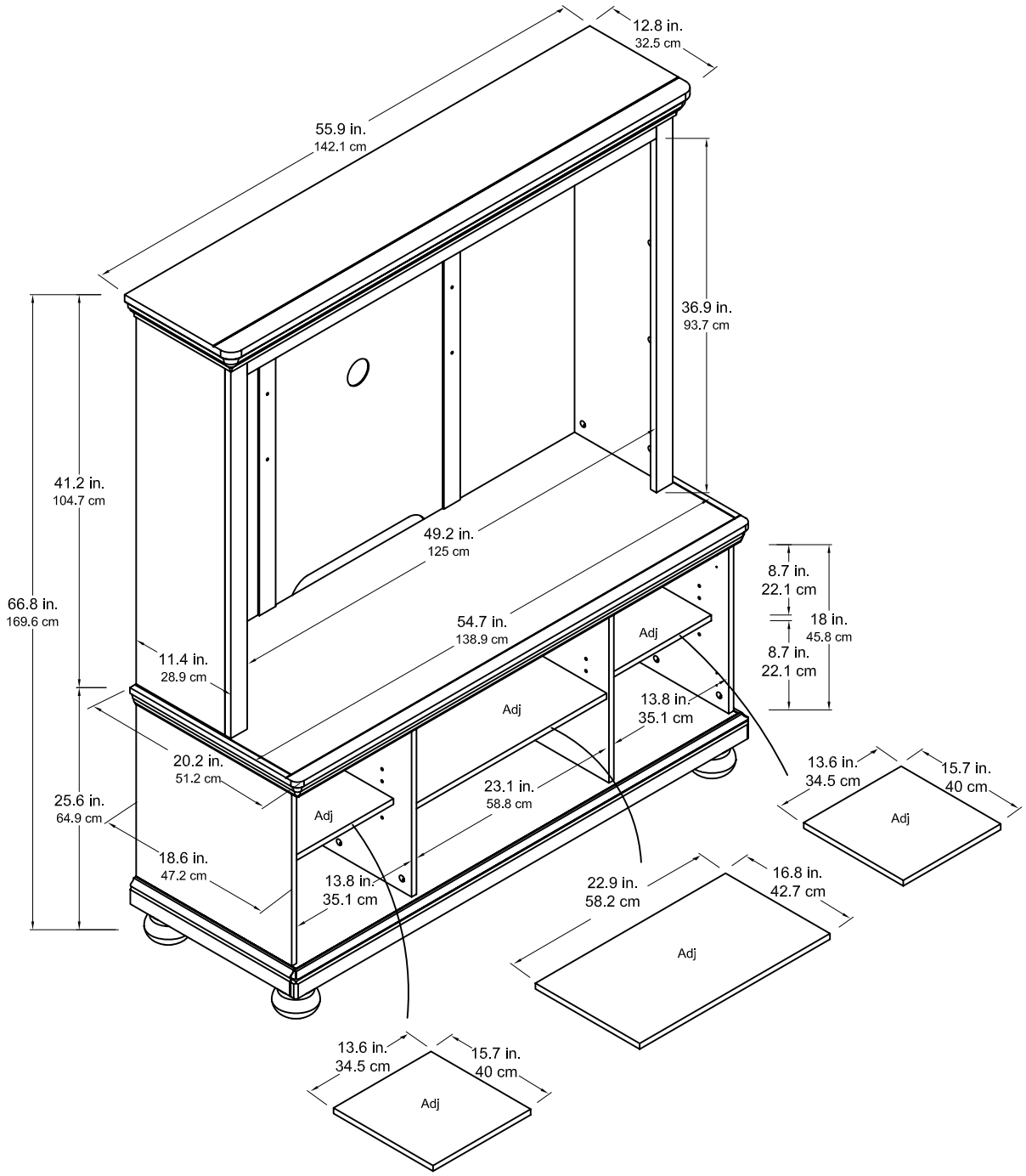
55.9"*20.2"*66.8"