Clayton 60" TV Stand
Model Number:1196196
Finish: Black and Cherry

OVERALL PRODUCT SIZE(in inches)

TV Stand:$59\frac{13}{16}$"(W)* $23\frac{3}{8}$" (D)* $34\frac{5}{16}$"(H)

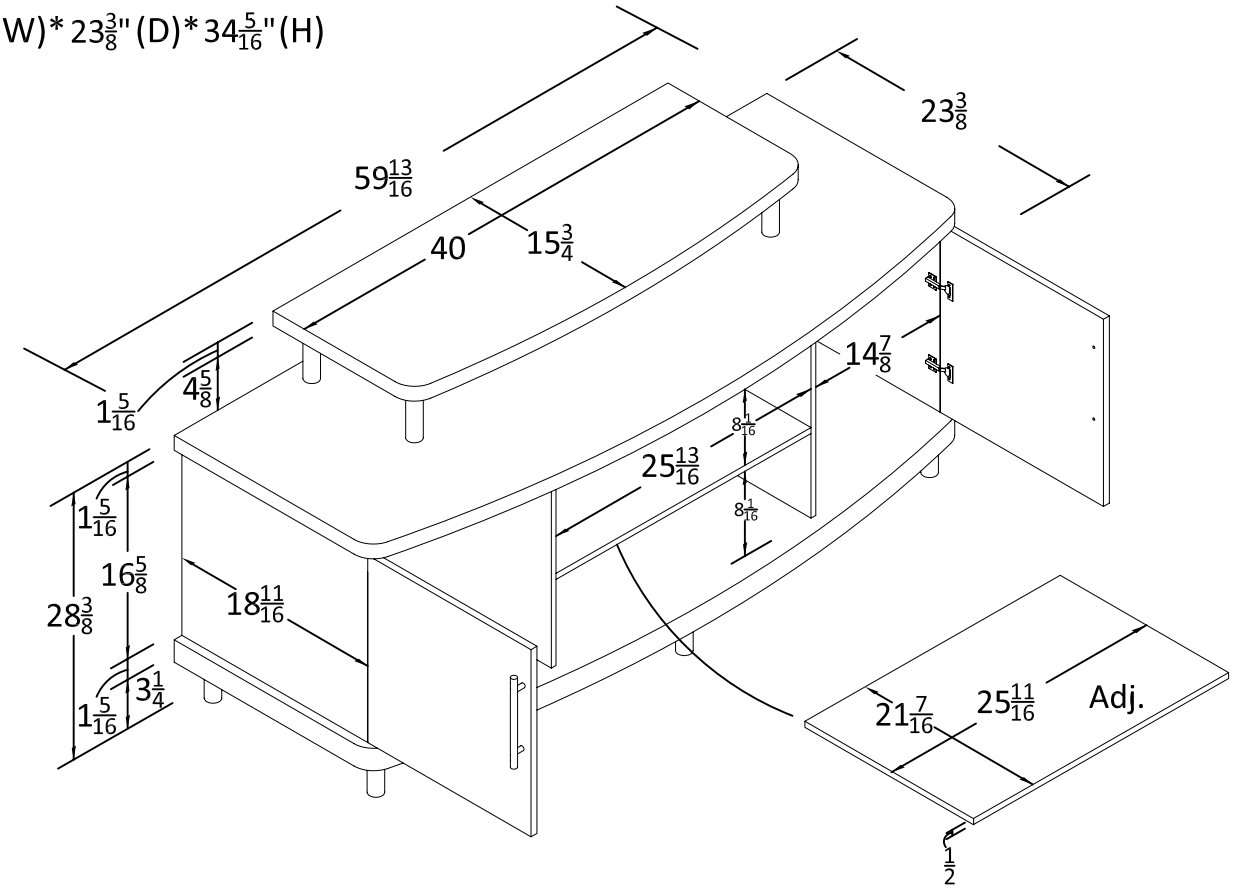
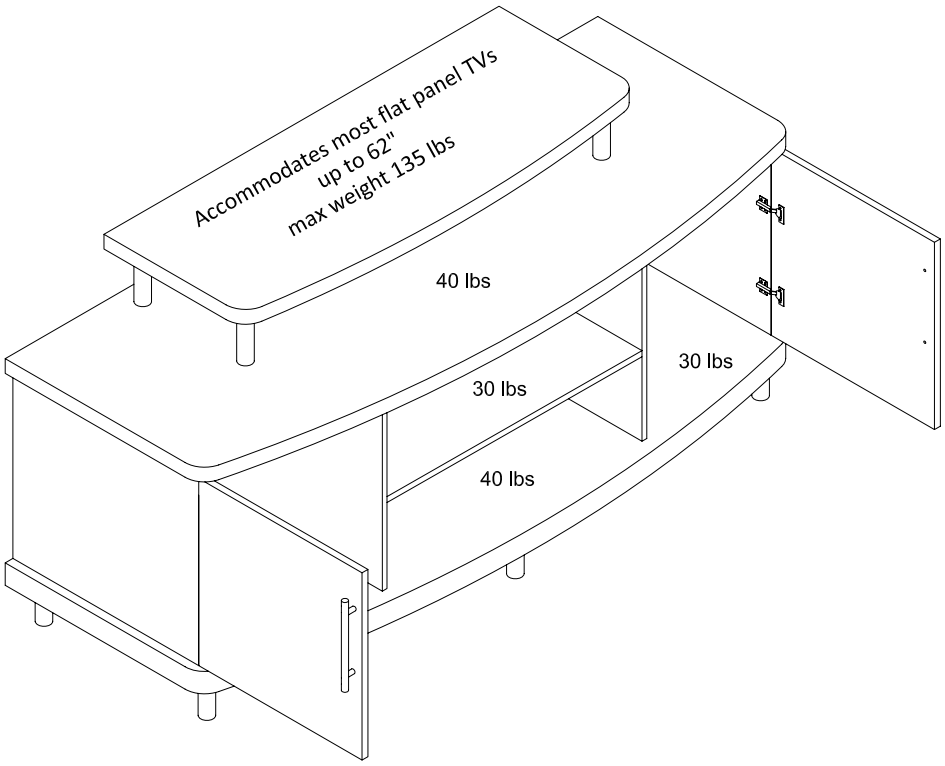
MAXIMUM WEIGHT CAPACITIES