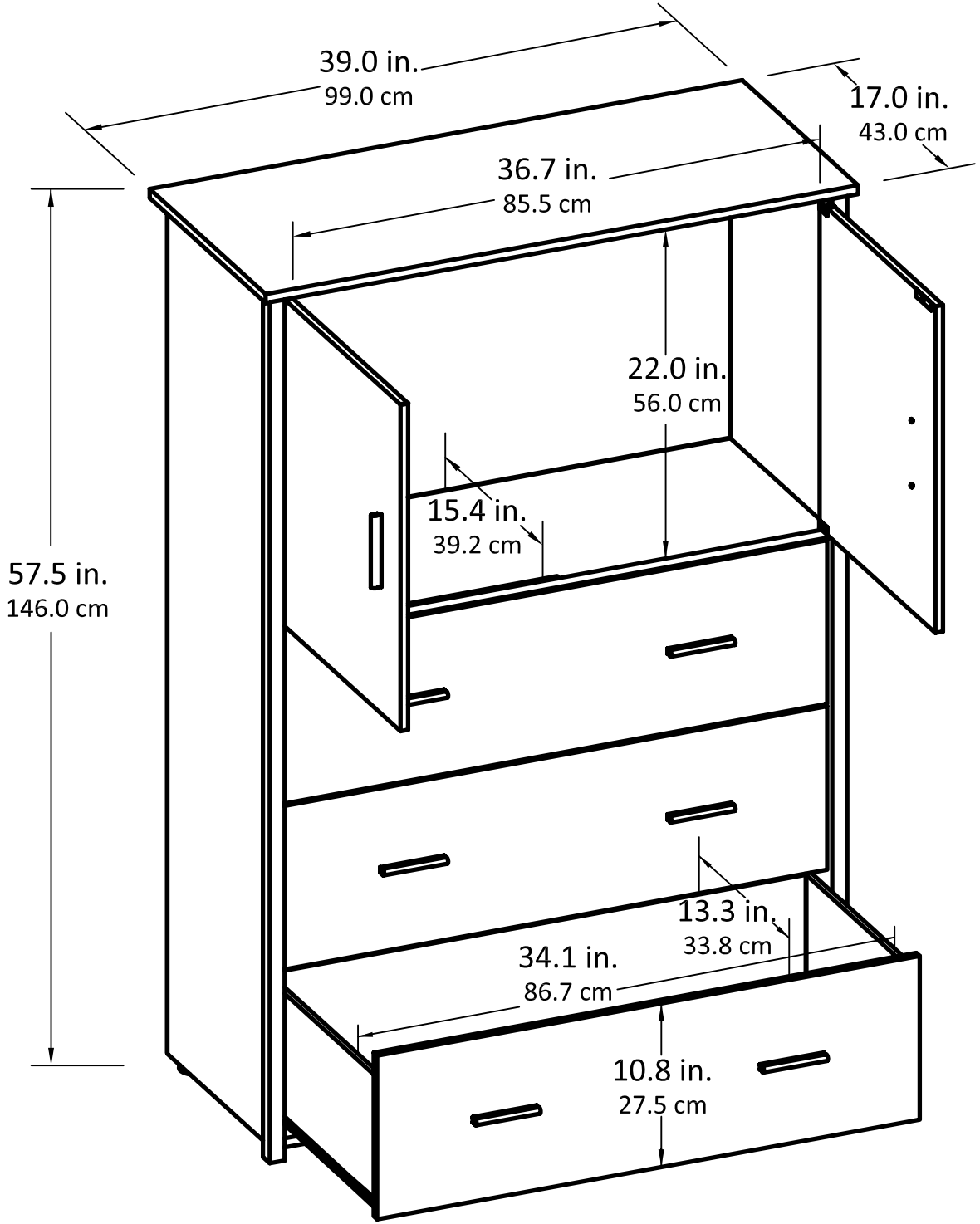

ATRA™
FURNITURE
Furnishings for Living